PROJECT ID. NO.	SHEET NO.
SM-6114C	Sig.M4

Fabrication Details – Mast Arm Poles

Note:
1. Opening in pole base plate shall be equal to pole base inside diameter minus 3½″ but shall not be less than 8½″.

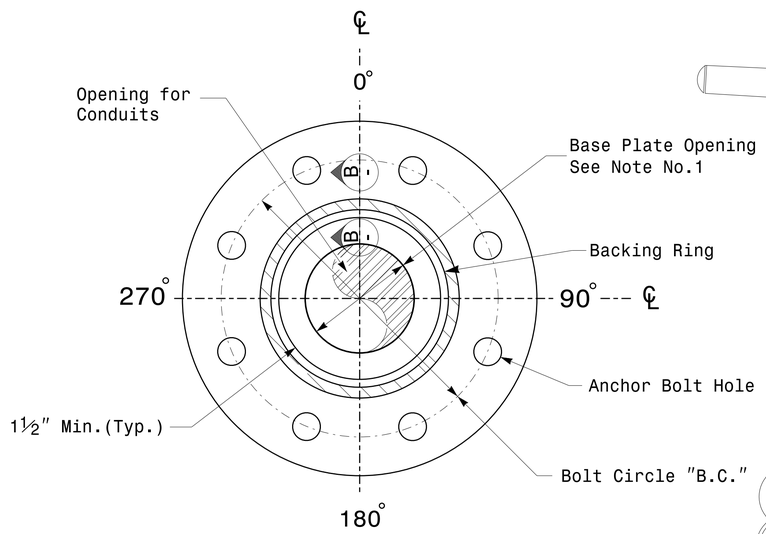

Section A-A

Pole Base Plate Details

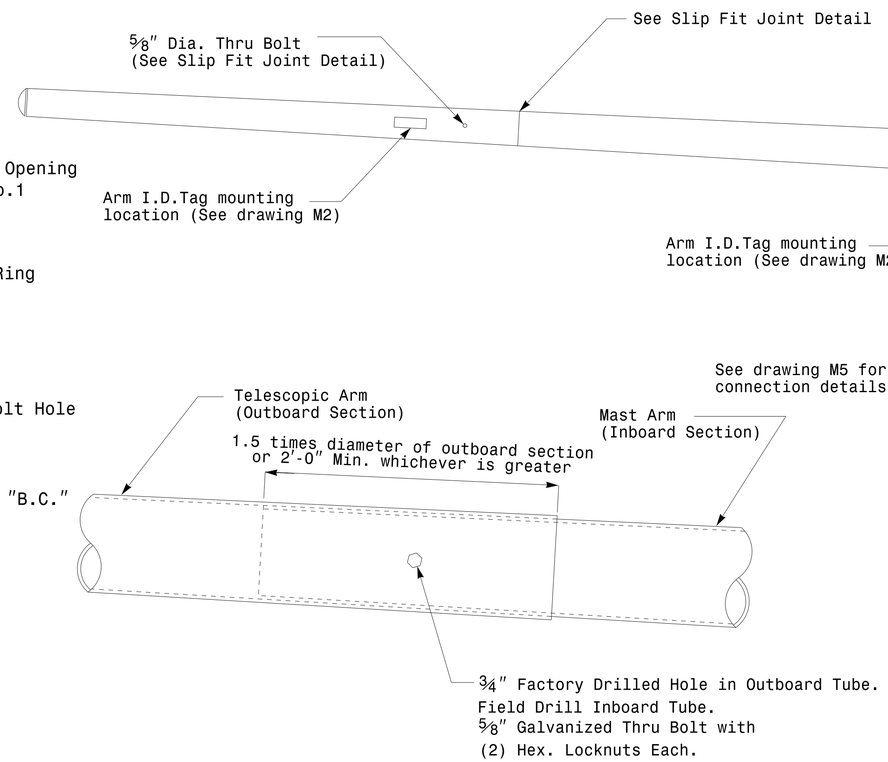

Slip Fit Joint Detail for Mast Arm

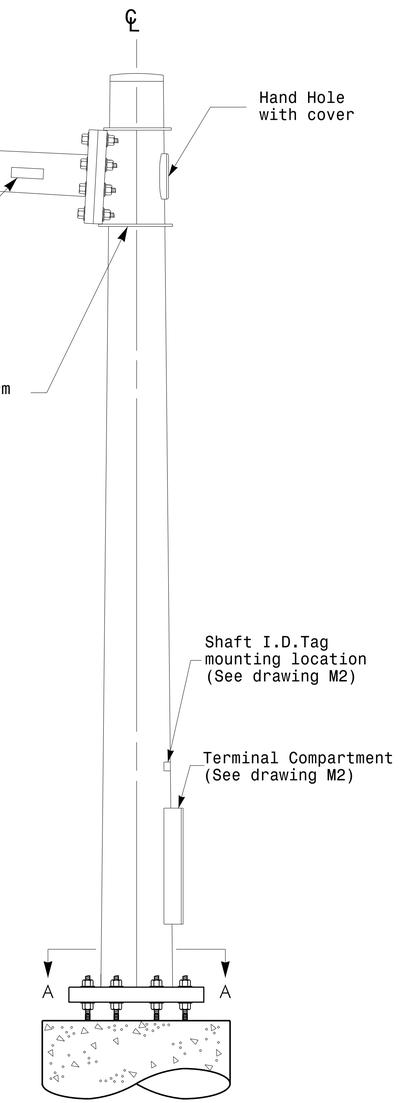

Mast Arm Pole

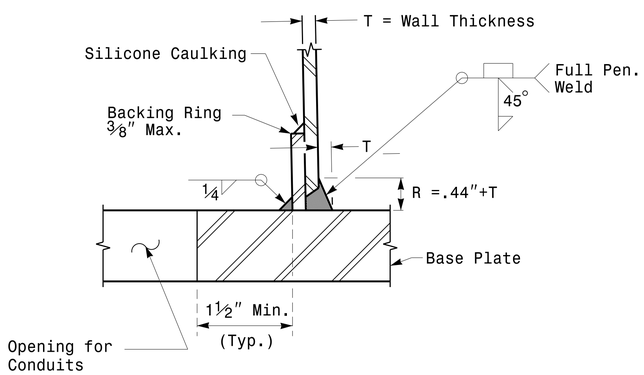

Section B-B

(Pole Attachment to Base Plate)

Full-Penetration Groove Weld Detail

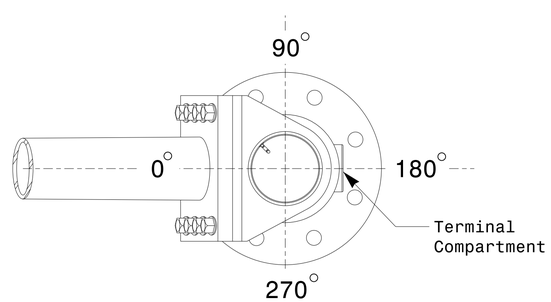

Mast Arm Radial Orientation

Prepared in the Offices of:
Transportation Mobility and Safety Division
Signal Design Section
750 N.Greenfield Pkwy,Garner,NC 27529

SCALE
0 NA
NONE

Typical Fabrication Details
For
Mast Arm Poles

PLAN DATE:	OCTOBER 2017	DESIGNED BY:	K.C.DURIGON
PREPARED BY:	N. BITTING	REVIEWED BY:	D.C. SARKAR

REVISIONS	INIT.	DATE

SEAL
NORTH CAROLINA PROFESSIONAL SEAL 028094 ENGINEER DEBESH C. SARKAR

DocuSigned by: Debesh C. Sarkar
SIGNATURE
10/11/2017
DATE

11-OCT-2017 08:33
S:\TSAS\ITS Signals\Signal Design Section\Eastern Region\M Sheets\2016\2014 Sig.M4 Std. Fabrication Details-Mast Arm Poles.dgn
rnbitter