| PROJECT I.D. NO. | SHEET NO. |
|---|---|
| SM-6114C | Sig.M9 |

NOTES:

1. OPENING IN POLE BASE SHALL BE EQUAL TO POLE BASE INSIDE DIAMETER MINUS 3½″ BUT SHALL NOT BE LESS THAN 8½″.
2. USE COMPACT SECTION CRITERIA D/T RATIO PER AASHTO LTS 6TH EDITION SECTION 5.5.2.

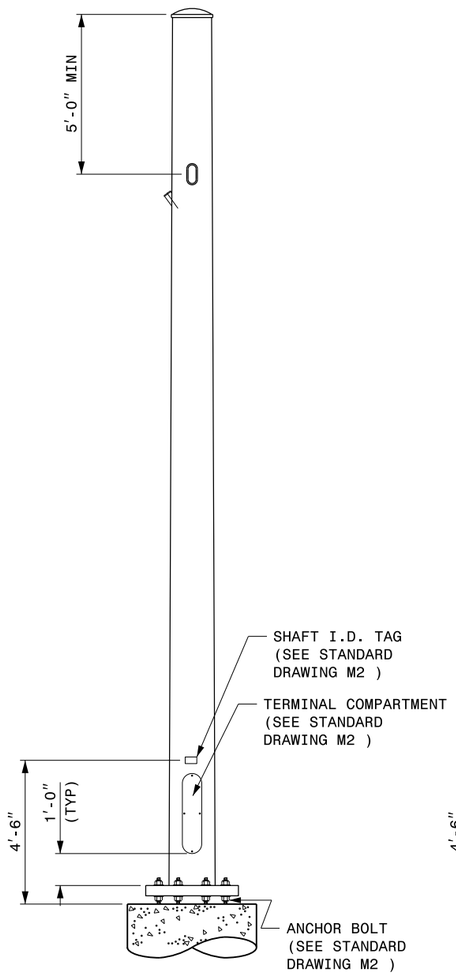


TYPE-1
CCTV CAMERA POLE
HEIGHT UP TO 40'-0″
(NOT TO SCALE)

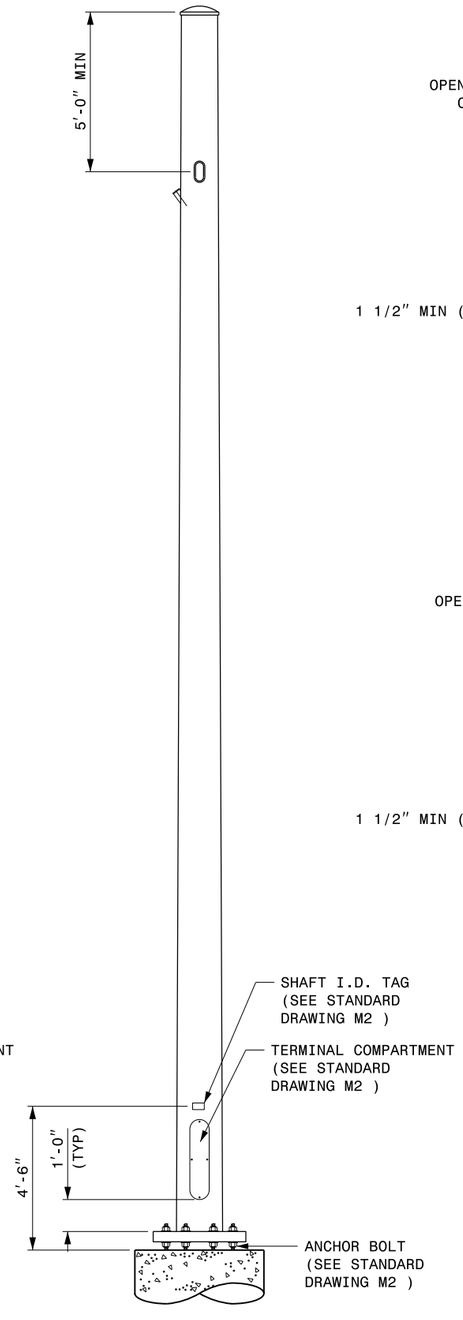


TYPE-2
CCTV CAMERA POLE
HEIGHT OVER 40'-0″ TO 100'-0″
(NOT TO SCALE)

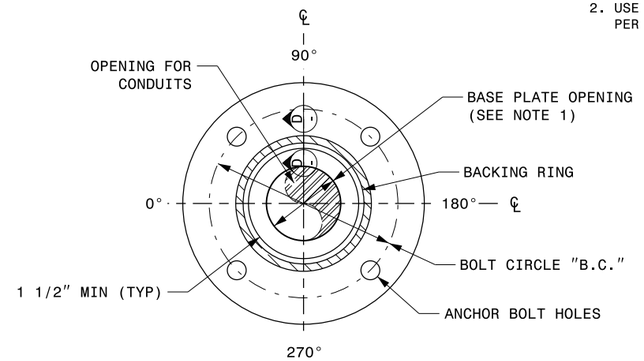


4 BOLT PATTERN

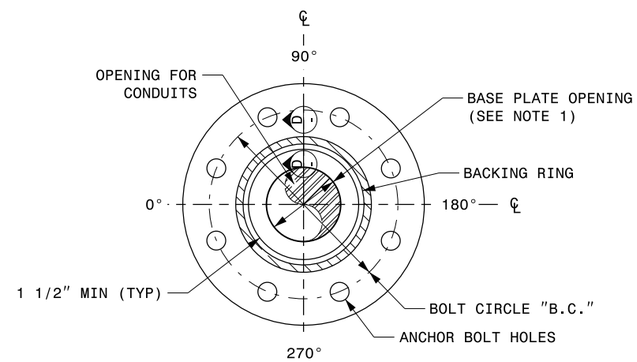


8 BOLT PATTERN

BASE PLATE DETAILS

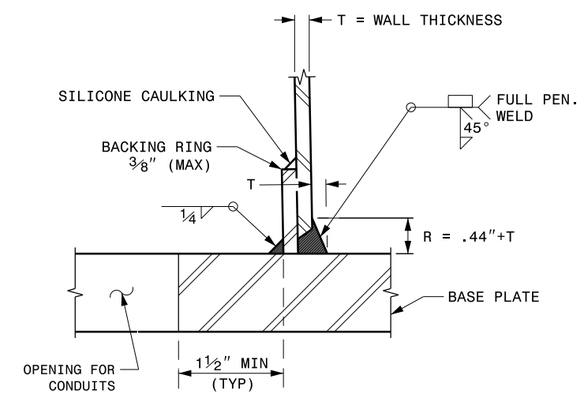


SECTION D-D
(POLE ATTACHMENT TO BASE PLATE)

FULL-PENETRATION GROOVE WELD DETAIL

# Fabrication Details – CCTV Camera Poles

Prepared In the Offices of:
Transportation Mobility and Safety Division
STATE OF NORTH CAROLINA DEPARTMENT OF TRANSPORTATION
Signal Design Section
750 N.Greenfield Pkwy,Garner,NC 27529

SCALE
0 NA
NONE

Typical Fabrication Details
For
CCTV Poles

| PLAN DATE: OCTOBER 2021 | DESIGNED BY: K.C. DURIGON | |
|---|---|---|
| PREPARED BY: K.C. DURIGON | REVIEWED BY: D.C. SARKAR | |
| REVISIONS | INIT. | DATE |

SEAL
NORTH CAROLINA PROFESSIONAL SEAL 028094 ENGINEER DEBESH C. SARKAR

DocuSigned by:
Debesh Sarkar
26D7411BF02B401...
SIGNATURE
10/13/2021
DATE

13-OCT-2021 13:44
S:\MTSASU\ITS Signals\Signal Design Sections\Structures\Drawings\CCTV Pole STD Dwgs\Sig.M9 Fabrication Details - CCTV Poles.dgn
kcdurigon